REVISIONS			
REV	DESCRIPTION	DATE	APPROVED

NOTES: UNLESS OTHERWISE SPECIFIED

1. SEE DRAWING NO. CB–00282 AND PROCEDURE P–1000 FOR ASSEMBLY AND TEST INSTRUCTION. PROCEDURES AND ASSEMBLY DRAWINGS ARE FOR INTERNAL USE ONLY.
2. ALL TESTING ARE IAW BATTERY COUNCIL INTERNATIONAL STANDARDS.
3. ALL DIMENSIONS ARE IN INCHES [MM].

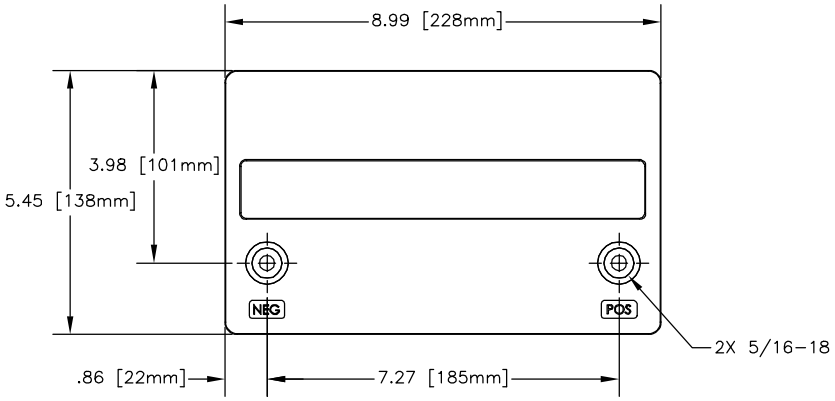

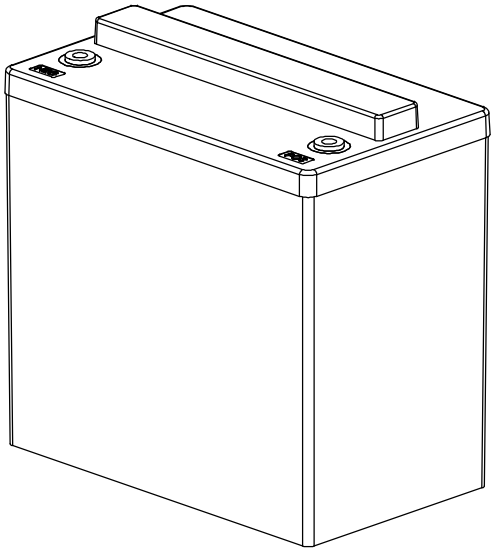

REFERENCE VIEW

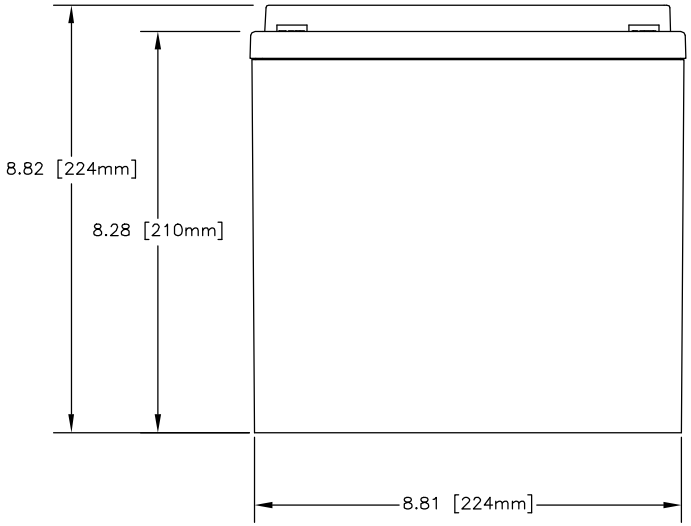

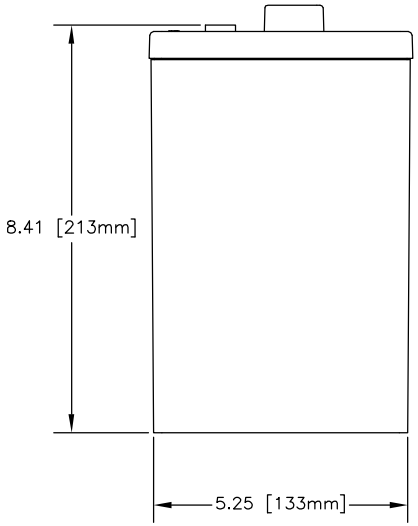

CAPACITY RATINGS		
PART NUMBER	AGM–1248T	AGM–1255T
NOMINAL WEIGHT	35 LBS[15.9 KG]	39 LBS[17.7 KG]
AMPERE HOUR CAPACITY @ 20 HOUR 1.75 VOLTS/CELL @ 77°F (25° C)	48 AH	55 AH
MINUTES OF DISCHARGE @ 25 AMPS 1.75 VOLTS/CELL @ 77°F (25° C)	84 MIN	96 MIN

QTY REQD	CAGE CODE	PART OR IDENTIFYING NO.	NOMENCLATURE OR DESCRIPTION	MATERIAL SPECIFICATION	ITEM NO.

PARTS LIST

UNLESS OTHERWISE SPECIFIED DIMENSIONS ARE IN INCHES TOLERANCES ARE:
FRACTIONS DECIMALS ANGLES
.XX ± .06
.XXX ± .060

TREATMENT NONE
FINISH NONE
SIMILAR TO N/A | ACT WT N/A | CALC WT N/A

CONTRACT NO.

APPROVALS		DATE
DRAWN	ELH	3/16/00
CHECKED	S. VALDEZ	3/16/00
APPROVED	DG	3/23/00
ISSUED	DR	3/23/00

CONCORDE BATTERY CORPORATION
2009 SAN BERNARDINO RD, W. COVINA, CA 91790

TITLE BATTERY, 12 VOLT, AGM–1255T SERIES

SIZE C | CAGE CODE 63017 | DWG NO. AGM–1255T | REV

SCALE NONE | SHEET 1 OF 1

ENGINEEINRG COPY 23MAR00